International Journal of Advanced Science and Technology
Vol. 29, No. 5, (2020), pp. 7352-7375

Tourist Behavior Destination Selection Model

I Gusti Bagus Rai Utama[1], Christimulia Purnama Trimurti[2], Jaya Pramono[3], Ni Putu Dyah Krismawintari[4]

[1]*Hospitality Management of Universitas Dhyana Pura, Bali. Indonesia.*
[2]*Management of Universitas Dhyana Pura, Bali. Indonesia.*
[3]*Hospitality Management of Universitas Dhyana Pura, Bali. Indonesia.*
[4]*Management of Universitas Dhyana Pura, Bali. Indonesia.*
[1]*Email: raiutama@undhirabali.ac.id,* [2]*Email: christimulia@gmail.com,*
[3]*Email:jayapramono@gmail.com,* [4]*Email: krismawintari@undhirabali.ac.id*

Abstract

This study uses a quantitative approach to analyze the direct relationship between variables in the model, namely variables travel expectations, destination image, tourist satisfaction, and tourist loyalty. The theoretical model testing participated by 413 respondents who were determined by accidental sampling and SEM-AMOS analysis was used to confirm confirmatory factors. This research has answered four main problems, which can be explained as follows, (1) expectation variable has a positive and significant influence on destination selection, (2) destination attractiveness variable has a positive and significant effect on destination imaging, (3) image variable destination has a positive and significant effect on tourist satisfaction, and (4) tourist satisfaction variable has a positive and significant effect on tourist loyalty. The practical implications of the research recommend that if Bali tourism destinations expect tourists to be loyal to Bali destinations, then all stakeholders of Bali tourism destinations must be able to maintain the tourist satisfaction factor, where they are currently very satisfied with the existing tourist attractions and satisfied with the trip in Bali. Some are also satisfied with the availability of facilities and are satisfied with services during a vacation in Bali.

Keywords: expectation, motivation, attractiveness, image, satisfaction, loyalty.

1. Introduction

This research is confirmatory research of destination development model from the perspective of travel motivation which is expected to be used as a theoretical reference model of a tourism marketing mix specifically related to travel motivation, destination image, tourist satisfaction, and tourist loyalty. The results of this study are expected to determine: (1) the dynamics of the marketing mix of tourism destinations based on the perspective of foreign and domestic tourists traveling in Bali as a material for consideration to improve quality and manage destinations following tourist expectations. (2) The determinants of tourist satisfaction in Bali as preliminary information on destination management that is more in line with tourist expectations. (3) Tourist loyalty to Bali destinations. (4) Tourist loyalty factors that travel in Bali, so that it becomes information to improve the quality of tourism destinations as a unit of interconnected and mutually influential products.

ISSN: 2005-4238 IJAST
Copyright ⓒ 2020 SERSC

This research is also expected to provide a different color about marketing theory and at the same time be a useful marketing theory for all people who want to understand tourism marketing such as tourism students, tourism business managers, and other general public who are interested in developing the tourism sector. The renewal of the tourism marketing mix, in particular, is related to travel motivation, destination image, tourist satisfaction, and tourist loyalty.

This research is feasible to be carried out because, at present, there are still many differences in the components forming the destination image. For example, Fakeye and Crompton [12] assume that destination images consist only of cognitive components, whereas cognitive perception or evaluation only refers to an individual's knowledge and belief in an object that is perceived or evaluated. Whereas Mazursky and Jacoby [28] assume that consumers build a total image is based on the evaluation of various attributes of products and services. Likewise, Gartner and Ruzzier [15] state that tourist perceptions of various destination attributes will interact in forming a total image. However, Colton [8] has tested based on empirical facts that there is a relationship between cognitive attributes with a total image and concluded that the total impression is highly dependent on destination attributes based on individual tourist perceptions.

This study confirms five dimensions or variables in the tourist loyalty model. The five dimensions are (1) tourist expectations, (2) destination attractiveness, (3) destination image, (4) tourist satisfaction, and (5) tourist loyalty can be examined or tested using the consumer loyalty theory approach.

2. Literature Review

2.1 Tourism destination image theory initial tourism

This research included destination image variables in the measurement of satisfaction and loyalty to destinations that began in 1970 conducted by Beerli and Martin [4]. Similar research was continued by several researchers in the United States to examine the influence of destination images at regional and national levels [3, 19]. The definition of the destination image is familiar in the world of tourism because it is essentially the true image that drives and encourages tourists to determine their choice of tourist destinations [10, 12, 15, 19].

Although the term destination image has been considered something extraordinary, there are still many who formulate it on the concept that is not appropriate, including frequent errors in operationalization in the field. The dynamics and complexity of tourism products play a role in the operationalization of the concept of the destination image Smith [15, 36]assume that tourism products are multidimensional products, while Gallarza [14] consider tourism products to be subjective products, and Fakeye and Crompton [12]assume that tourism products are

ISSN: 2005-4238 IJAST
Copyright ⓒ 2020 SERSC

intangible products, making it very difficult to measure the destination image in a destination loyalty model.

To get a better understanding of destination imagery, Gallarza [14] has built a theoretical framework about destination imagery built on four terms, namely complex, multi-element and process, relative, and dynamic. The destination image is something complex to explain in an analytical dimension. Multi elements and processes explain the destination image as a dimension of the results of an action. Relatively, a destination image is also a strategic tool, especially in the management and marketing objectives. While dynamically, the destination image always follows the policy based on the image of a destination.

Destination imagery becomes complex because there is still a lot of debate over how to measure it, and the many components that are included in the measurement. The multi-dimensions of the destination image are also caused by the attributes that are included are quite diverse and interrelated. While its relativity is caused by the subjective way of interpreting it from one another and very much depends on the comparison to be used. Destination image is also not something static but very dynamic along with changes in space, time, and place. Based on this reason the destination image variable is included in the loyalty model because Bali's tourism destination image might have changed now compared to the past [38, 40].

According to Milman and Pizam [29], cognitive offers three components that make up the destination image, namely: attraction, host behavior, and destination environment such as climate, facilities, and so on. Meanwhile, Satyarini[33] identifies that cognitively, destination images consist of psychological components of tourists, uniqueness, and destination attributes holistically.Furthermore, Beerli and Martin [4] have conducted research and classified nine attributes affect the image of the destination, namely: (1) natural attributes, (2) opportunities for tourists to have fun and recreation, (3) natural environment, (4) facilities general, (5) culture, history, and art, (6) environment social, (7) tourism infrastructure, (8) economic and political factors, and (9) destination atmosphere.

The destination attributes above affect the image of the destination as a result of the subjective perception of tourists which influences the tourist destination's choice of tourism. Destination imagery influences the process of selecting tourist destinations in the future as a consequence of evaluations that have been carried out [7, 6, 32].In the test model conducted by Chi [6] implies that the key elements of loyalty to the destination (repeat visits and recommending potential tourists) are determined by the destination's image through total satisfaction. In the research to be carried out, assume that the destination image affects tourist satisfaction and will influence loyalty.

ISSN: 2005-4238 IJAST
Copyright ⓒ 2020 SERSC

2.2 Tourist satisfaction theory

Satisfaction plays an important role in the marketing planning of products and services. Related to tourism, tourist satisfaction is important for the success of marketing tourism destinations because satisfaction is directly affecting the decision of tourists to enjoy products and services, and the decision to come back is also influenced by tourist satisfaction [25].

In the context of today's modern marketing, customer satisfaction has become the main pillar in running a business to realize the company's goals in making a profit. Consumers who are satisfied by the company become a big asset to the survival of the company. Therefore, it is necessary to do the management of the quality of services offered to meet customer satisfaction. Well-managed service quality will give good results to meet customer satisfaction [38, 40].

Consumers have the freedom to judge whether the mix of services offered by the company provides satisfaction as they want or not. If the service they feel is unsatisfactory, it is feared that they will tell others, so that it will adversely affect the development of service provider companies. And vice versa if the service is satisfactory according to customers what they want, it will benefit the service provider companies, because the cost of promotion and effort to introduce company products will be reduced. To encourage the achievement of the service marketing mix goal, companies need to provide additional services (supplementary services) for core service transactions so that these core services can provide satisfaction, these additional services can be reflected in the service mix elements offered by service companies to consumers [38, 40].

Destination tourism as a service product that is people-based service, which relies on the ability of human skills, should pay attention to the service mix that will also affect customer assessments of the quality of services owned by service providers. In the context of tourism destinations, the service mix can include destination facilities, service excellence and reliability of tourism workers in providing services that are following the wishes of customers or tourists [38, 40].

Shifting company orientation from market orientation to customer satisfaction orientation makes customer satisfaction a determining factor for the company's survival because customers are satisfied with the services provided by the company so they will recommend others to use the services of companies that have provided satisfaction with their needs. More firmly, Kotler [24] states that customer satisfaction is: Satisfaction is a person's feeling of pleasure or disappointment resulting from comparing a product's perceived performance (outcome) with his other expectations. It was explained that customer satisfaction is a function of customer expectations for the service it receives. Customers will be able to get satisfaction from the services provided by the company if the service meets the quality of service and meets the

ISSN: 2005-4238 IJAST
Copyright ⓒ 2020 SERSC

expectations expected by the customer. Vice versa, if the customer expectations are not met and the quality of service is felt below the standard, the customer will be disappointed and may leave the service provider company and maybe even he will tell the shortage to others. These negative testimonies will be very detrimental to the survival of the company for the future. However, if the quality of service received by customers exceeds their expectations, customers will feel satisfied with the company's services so hopefully, they will give a good testimony or testimony about the products they enjoy.

Consumer satisfaction is an important goal for business activities. Consumer satisfaction is also seen as one of the best indicators for profit in the future [24]. The facts show that attracting new customers is far more expensive than retaining existing customers. Consumer satisfaction is one indicator that affects loyalty. The higher the level of satisfaction, the higher the loyalty will be. In connection with this, Zeithaml[46] states that customer satisfaction when the fulfillment of consumer responses is reached. Oliver [30] suggested that consumer satisfaction is an evaluation of the surprise inherent in the acquisition of products and or experience.

Simply stated, some of the above opinions can be said that customers who are satisfied by the company will be a great asset to the survival of the company. Maintaining customer satisfaction should be done as a management of the quality of services offered so that customer satisfaction can be maintained. The same thing can be said that the quality of service that is managed properly will give good results to meet customer satisfaction. If the service felt by consumers does not satisfy them, it is feared that they will tell others about their dissatisfaction, so that it will adversely affect the sustainability of the company. Vice versa, if the service felt by customers satisfies what they want, it will benefit companies, specifically service providers, because the cost of promotion and effort to introduce company products will be reduced [46].

According to Kotler and Keller [24] each service provided to customers needs to be evaluated by measuring the level of service quality that the company has provided to customers so that it can be known to what extent the quality of service provided has been able to provide satisfaction to customers. Furthermore, Wilkie [43] states that there are four elements in consumer satisfaction, namely: (1) the element of expectation, where consumers' expectations of an item or service have been formed before consumers buy goods or services. At the time of the purchase process, consumers expect that the goods or services they receive are following expectations according to their wishes and beliefs. Goods or services following consumer expectations will cause consumers to be satisfied. (2) Performance element, where the actual performance of goods or services when used is not affected by consumer expectations. When the actual performance of goods or services is successful, then

ISSN: 2005-4238 IJAST
Copyright ⓒ 2020 SERSC

consumers will feel satisfied. (3) Elements of comparison, where this is done by comparing the performance expectations of goods or services before buying with the perception of the actual performance of the goods or services. Consumers will feel satisfied when expectations before the purchase match or exceed consumer perceptions of the actual performance of the product; (4) elements of experience, where consumer expectations are influenced by their experience of the use of brands of goods or services that are different from others.

From some of the opinions above, it found a common meaning that customer satisfaction is an assessment of customers for the use of goods or services based on expectations and reality. In other terms, if consumers feel that what they are getting is lower than expected then the consumer will not be satisfied. Conversely, if consumers get more than what they expect, consumers will be satisfied. Whereas in a situation where what is received is the same as expected, then the consumer will feel mediocre or neutral.

Some researchers on customer satisfaction argue that standards used to measure service quality and measure customer satisfaction can use several different measurements [11, 27]. Here are some of the measurements that have been commonly used to determine customer satisfaction. Oliver [30] offers the expectation-disconfirmation model to measure that customer satisfaction is a measure of conformity between the expectation of a product or service before a consumer buy (purchasing). The consequences of the expectation-disconfirmation model, the actual appearance of a product or service compared to consumer expectations, and if the actual appearance is better than consumer expectations, then consumers can be expressed satisfied (positive disconfirmation). If the actual appearance of a product or service is worse than consumer expectations, then the consumer can be declared dissatisfied (negative disconfirmation). As a consequence of consumer disappointment or dissatisfaction, they will look for other alternative products or services for their next purchase.

Trimurti and Utama [38] found the theory the goodness of fit that tourist satisfaction is based on how well or following the expectations of tourists towards a tourism destination. The suitability of tourist expectations can only be measured if they have experienced or enjoyed a product or service at a destination they visited. A comparison of the image of a destination before they visit compared with the reality they see feels, and experience will determine the degree of tourist satisfaction [41].

Another theory conveyed by Oliver and Swan [30] is called equity theory. Inequity theory, customer satisfaction can be seen as a relationship between the money they spend (costs) to get a product or service with the benefits they get (benefits). Equity theory is also developed and used [21] Heskett, et al to measure consumer satisfaction, where money, benefits, time, and effort done by consumers

ISSN: 2005-4238 IJAST
Copyright ⓒ 2020 SERSC

determine satisfaction. The theory developed by [21] it was later known as The Service Profit Chain [40].

Another theory of customer satisfaction is the norm theory by Latour and Peat [26], which views that service is based on a norm in determining consumer satisfaction and dissatisfaction. The norm theory is similar to the disconfirmation theory, only in the norm theory, a predetermined standard of a product or service before a consumer expresses his satisfaction or dissatisfaction. The norm theory was further developed by some experts into an ideal standard theory, where travel satisfaction is determined by travel experiences, and perceptions (drivers and attractors) of what they have achieved and experienced while traveling [13, 35, 45]. In the field application, norm theory and ideal standard theory uses comparison standards, where consumers compare products or services with products or services they have bought or enjoyed before. Tourists can compare with similar products or services on the destinations they have experienced, before determining the choice of the next destination. The results of this comparison can determine the satisfaction or dissatisfaction of tourists.

The next theory is a perceived performance model developed by Tse and Wilton [39] states that consumer dissatisfaction is only related to a function or usefulness of the actual appearance of a product or service based on various expectations about the function and usefulness of products and services. This theory emphasizes that the actual appearance of a product and the expectations of consumers must stand alone, not based on a comparison of the actual appearance of the product with experience. This theory believes that the actual poor performance of the past at different destinations may have changed for the better and has been in line with the current expectations of consumers on new destinations. In this theory of perceived performance, a measurement of tourist satisfaction will be effective if tourists do not know about what they will enjoy or do, and tourists have never traveled to the destinations they visit today.

Although many measurements can be used to measure consumer satisfaction, the core meaning of tourist satisfaction must remain the basic measurement used to evaluate the appearance of tourism destination products and services[34, 45]. Measuring tourist satisfaction will be important especially concerning destination selection, products to be consumed by tourists, and at the same time knowing to repurchase. Measuring tourist satisfaction is also to evaluate the current destination. The results of evaluations of destinations are indicators that can help destination marketers make adjustments or changes to improve the quality of destination products that are more in line with consumer expectations.

Several methods can be used to measure customer satisfaction, and measuring satisfaction is an important action to see customer loyalty [24], knowing consumer

ISSN: 2005-4238 IJAST
Copyright ⓒ 2020 SERSC

responses to products [46], knowing consumer expectations, knowing product performance, knowing dynamics of consumer tastes, and at the same time determine the direction of product innovation following consumer expectationsWilkie and Moore[43] and explicitly Oliver [30] says that measuring customer satisfaction is essentially evaluating the product and consumer expectations.

According to Tjiptono [37], the method used to measure consumer satisfaction can be done by (1) measurement carried out directly with questions. (2) Respondents are asked questions about how much they expect a certain attribute and how much they feel. (3) Respondents are asked to write down the problems they face relating to the offer from the company and also asked to write down the problems they face related to the offer from the company and also asked to write down the improvements they suggest. and other methods, (4) respondents can be asked to rank various elements of the offer based on the degree of importance of each element and how well the company is performing in each element.

According to Tze and Wang [46] that tourist satisfaction with tourism destinations is a multidimensional concept consisting of many interrelated factors. One factor that makes tourists satisfied; maybe other factors are not able to satisfy tourists. According to them, the aspect of the destination that consists of attractions, amenities, and accessibility may have similarities between the destinations; however, for the aspect of the enlightenment, in this case,the intangible services are very dynamic and tend to demand quality that is increasing from time to time. The model developed by Tze and Wang [46] explains that satisfaction is a mediating variable of multi variables in the form of the attractiveness of destinations, services, and value for money towards the formation of tourist loyalty. Tourist satisfaction is a measurement carried out simultaneously (overall satisfaction) because tourism itself is an integrated product and has a link between all the satisfying factors. Multi Variables that make up total satisfaction are a combination of variable tourist attractions, hotels or accommodation, immigration services, restaurants, shopping centers, and transportation.

Meanwhile, according to Yoon and Uysal [45], one of the crucial elements of successful destination marketing is tourist satisfaction, which influences the choice of destination and the decision to return. The notion of Yoon and Uysal, [45] implies that a key element of loyalty to a destination (repeat visits and recommending potential tourists) is determined by tourist satisfaction.

2.3 Tourist loyalty theory

In the field of marketing, repurchases, or willingness to recommend prospective buyers are usually used to show tourist loyalty. High and low degrees of consumer loyalty is one indicator used to measure the success of a marketing strategy

ISSN: 2005-4238 IJAST
Copyright ⓒ 2020 SERSC

[45].The same thing happened in the tourism sector. As a product, tourists may come back or recommend friends, family as potential tourists. In this context, a study of consumer loyalty will be applied to the field of tourism, where tourism is a product or service that is offered to tourists amid increasingly fierce destination marketing competition [40].

In general, tourist loyalty can be measured by various approaches, namely (1) the behavioral approach, (2) the attitudinal approach, and (3) the composite approach [45]. The behavioral approach is related to consumer loyalty to the brand which is indicated by the willingness to make purchases, determine the number of purchases, and the opportunity to make repeat purchases [9]. The concept offered by [9] has received much debate, especially regarding the weakness of the measurement approach which assumes that this approach will apply if the production process is static while the production process continues to experience dynamics. This loyalty measurement cannot explain what factors have an impact on tourist loyalty. The loyalty of tourists to destinations or tourism products may not be enough to explain why and how tourists make repeat visits or recommend friends, family, or others as potential tourists.

Another approach is the attitudinal approach. Measurement of satisfaction with this approach emphasizes the brand as a choice for consumers or the willingness to make a purchase. Loyal consumers are shown by a deeper willingness to express psychological loyalty that ultimately gives birth to a commitment or statement to choose. Tourists may have a favorable attitude towards the destination, and they express it intending to return. This loyalty measures the love of tourists/consumers for the product and explains the more willingness of tourists towards destinations such as the willingness and ability to pay more [2].

The third approach is the composite or combination approach. This approach is a combination of behavioral approaches and attitudinal approaches [2]. It was explained that consumers who buy are consumers who have loyalty to the brand and they should have a positive attitude towards the product. Unfortunately, this approach has limitations, that not all weights or scores can be calculated and apply to both behavioral and attitude factors, because the two factors may have different measurements. Some researchers even suggest choosing one of these two approaches or integrating the two [46]. Thus, a theoretical study shows that understanding of consumer/tourist loyalty needs to consider motivational factors and satisfaction together.

Zeithaml, et al., [46] explained that the benefits that can arise from customer loyalty for the company are: (1) consumers who are satisfied with the goods and services they consume will tend to repurchase from the same producer. (2) Satisfaction is a factor that encourages positive word of mouth communication. (3)

ISSN: 2005-4238 IJAST
Copyright ⓒ 2020 SERSC

The effect of customer satisfaction on the behavior of satisfied consumers tends to consider service providers who can satisfy as the first consideration if they want to buy the same product or service [18]. They also believe that loyalty is voluntary consumer loyalty which is assumed to be in the market mechanism, which can be seen from the actions of consumers in several ways, namely: (1) willingness to tell satisfaction of a product to friends, relatives, or other people who might become potential new customers for the company. (2) Willingness to repurchase or repurchase. (3) Directing other potential customers to make purchases on the same product. (4) It gives a positive value to the company. (5) Harmonious social relations with companies. (6) Willingly involved directly with the company to improve product quality. Loyal customers can have a positive effect on the company because loyal customers will be good marketers for the company through testimonies about the company. They also tend to re-purchase the same products and brands. They also tend to direct other prospective buyers to buy products that are currently being enjoyed.

Contextualization of tourist loyalty to tourism destinations is loyalty is the consistency of tourists to always visit a destination even though competitors offer new destinations with superior quality attributes. In the tourism industry, there is empirical evidence that considers satisfaction is a strong indicator of tourist loyalty to return to a tourism destination, and at the same time loyal tourists will be good marketers for destinations because they tend to tell stories and recommend friends, family, and relatives, and others to visit the destinations they have visited [6, 40].

Meanwhile, according to Kozak and Rimmington [6, 25] that satisfied tourists will tend to come back to the same destination during the upcoming holidays, and tend to share positive stories about their experiences during the holidays with friends and relatives. According to them, this trend is a reliable indicator of measuring tourist loyalty. Furthermore, it is said that satisfaction has an impact on tourist loyalty and will be an indicator of loyalty to all industries in a destination.

In a study of tourist loyalty, Chi[6] succeeded in building a tourist loyalty model as a series of interrelated and originated from the destination image in the minds of tourists, destination images associated with the attributes of a destination, and the total impact on tourist satisfaction simultaneously. According to him, the total satisfaction of tourists has an impact on loyalty to the destination. It is indeed very difficult to measure tourist loyalty to a destination, but a commitment to return to a destination is an appropriate indicator to measure tourist loyalty[6, 12, 16, 20].

But according to Yoon and Uysal [6, 45]the motivation of travel affects the image of the destination, while the image of the destination also affects tourist satisfaction, where tourist satisfaction is a determinant of tourist loyalty. Tourist satisfaction is also a connecting variable between tourist travel motivation and tourist

ISSN: 2005-4238 IJAST
Copyright ⓒ 2020 SERSC

loyalty. Whereas tourist loyalty to destinations is only evidently shown by the variables: (1) commitment to revisit to the destination on the upcoming holidays, and (2) willingly volunteering to direct potential tourists to travel to the destinations they have visited.

2.4 Research Hypothesis

The hypothesis is built from a theoretical model of tourist behavior in travel decision makingChi [6]; Yoon and Uysal [45], namely:

1) There is a positive correlation between tourist expectation (X1) and destination attraction (Y1)
2) There is a positive correlation between destination attraction (Y1) and the destination image (Y2)
3) There is a positive correlation between destination image (Y2) and tourist satisfaction (Y3)
4) There is a positive correlation between tourist satisfaction (Y3) and tourist loyalty (Y4)

3. Research Methods Research

Approach this research uses a quantitative approach. The use of a quantitative approach in this study is to analyze the direct relationship between the variables that exist in the model, namely the variable expectations of travel, destination image, tourist satisfaction, and tourist loyalty.

3.1 Population and sample

The population in this study was tourists who were on vacation in Bali. The sample was chosen based on an accidental sampling technique, which is a sampling technique based on the provisions of tourists who happen to be on vacation in Bali. The number of respondents was determined based on the ideal sample size of the SEM-AMOS structural analysis tool around 100-200, but in this study, the sample numbered 413 respondents for the category of domestic tourists and foreign tourists [42].

3.2 Research instrument

The research instrument in this study was a research questionnaire. The research questionnaire in question is the things that researchers must ask and answers that should be obtained from respondents based on their respective perceptions of Bali as a tourist destination. This research is confirmation research of tourism destination marketing mix from the perspective of traveling motivation theory. This research consists of five dimensions or variable study objects which are formed into a tourist

ISSN: 2005-4238 IJAST
Copyright ⓒ 2020 SERSC

loyalty model. Based on the five variables, namely tourist expectations (X_1), destination attractiveness (Y_1), destination image (Y_2), tourist satisfaction (Y_3), and tourist loyalty (Y_4) can be examined or tested using a theoretical approach to consumer loyalty. Research on the five variables mentioned above is not a separate study with each other, but causality research that is integrated with the tested constructs [6, 45].

3.3 Theoretical model

Testing the loyalty model conducted by Yoon and Uysal, [45] only included three latent variables namely internal motivation, external motivation, and tourist satisfaction. The model does not include destination image variables, whereas in tourism these variables are proven to be closely and strongly related to tourists' decision to determine destination choices in the research conducted by Chi[6] and Utama [41].

Loyalty model testing done by Chi [6] did not include tourist motivation variables and only included destination image variables, destination attributes, and tourist satisfaction. Testing the motivation variable as a determining variable in the formation of destination loyalty is an important test because the decision to be moved and attracting tourists to travel is determined by these variables [1, 6, 17, 22, 44, 45]

3.4 Data analysis

3.4.1 Techniques descriptive statistical techniques

The statistical description is an analysis carried out by describing a collection of data visually, which can be done by description with numerical tables, text, and figure.

3.4.2 Analysis of structural equation modeling

The survey was conducted and several data obtained, then testing the hypothesis using Structural Equation Modeling (SEM). Kelloway [23] suggested that covariance structure models can be used to test various complex models. Various tourist loyalty research models also use SEM as a model test tool, as in the research of Yoon and Uysal [6, 45]. SEM is a statistical model that explains the relationships among several variables, by examining the structure of the relationships among the variables in the model.

The model with SEM consists of several stages namely: The first stage is defining the existing construct and then developing a measurement model. The second stage is testing the measurement model simultaneously. The third stage is the assessment of structural model specifications and structural model validity. Several model eligibility criteria have been developed to interpret a structural equation model, to determine the degree of compatibility of a model with empirical data.

Commonly used model eligibility criteria include Chi-Square, Goodness of Fit Index (GFI), Adjusted Goodness of Fit Index (AGFI), Root Mean Square Error of

ISSN: 2005-4238 IJAST
Copyright ⓒ 2020 SERSC

Approximation (RMSEA), Non-Normed Fit Index or Tucker Lewis Index (TLI)), and Normed Fit Index (NFI). For the criterion Chi-Square (χ^2), number χ^2 a low and a probability level above 0.05 indicates that there is no difference between the observational data and the estimated data. The eligibility criteria for the model meet at least one or more of the following criteria (1) Chi-Square is expected to be small, (2) significance probability ≥ 0.05, (3) RMSEA ≤ 0.08, (4) GFI ≥ 0.90, (5) AGFI ≥ 0.90, (5) CMIN / DF ≤ 3.00, (6) TLI ≥ 0.95, and (7) CFI ≥ 0.95 [42].

4. Research Results and Findings

4.1 Respondent profile

The number of respondents was 413 people consisting of 56.66% involving male respondents and 43.34% women. When viewed from their nationality, 40.68% of them are Australian and the rest are other nationalities such as the Netherlands, German, USA, Japan, France, Italy, England, Switzerland, and Others. Respondents in this study were predominantly repeated tourists at 79.90%, and only 20.10% made their first visit to Bali (See Table 1).

Table 1. Profile of Respondent

Profile	Category	Frequency	Percent
Sex	Male	234	56.66%
	Female	179	43.34%
	Total	413	100.00%
Nationality	Australian	168	40.68%
	Netherlands	41	9.93%
	German	27	6.54%
	USA	24	5.81%
	Japan	17	4.12%
	France	17	4.12%
	Italy	15	3.63 %
	England	15	3.63%
	Switzerland	13	3.15%
	Others	76	18.40%
	Total	413	25.18%
Visit	More than two times	263	63.68%
	Two times	67	16.22%
	First time	83	20.10%
	Total	413	100.00%

ISSN: 2005-4238 IJAST
Copyright ⓒ 2020 SERSC

4.2 Description expectationof travelers before visiting (mean and standard deviation)

Expectation they traveled the most strongly encouraged to travel is the motive of finding something beautiful and unique. The next expectation is to expect culinary adventure, expect local people interaction, expect cultural events, expect high-quality public transportation, and expect the high quality of infrastructure. Other expectations are to expect tropical climate and weather conditions and expect shopping destination adventure (see Table 2).

Table 2. Mean of Tourist Expectation Tourist

Indicator	Mean	Std.Deviation	Remark
Expect beautiful and Unique Attractions	4.34	0.860	Very Good
Expect culinary adventure	4.13	0.911	Good
Expect local people interaction	4.11	0.880	Good
Expect cultural events	4.06	0.982	Good
Expect highly quality public transportation	3.98	1.009	Good
Expect the high quality of infrastructure	3.55	1.077	Good
Expect tropical climate and weather condition	3.37	1.376	Moderate
Expect shopping destination adventure	3.26	1.191	Moderate
Valid N (listwise) = 413			

Remarks: (1.00-1.80 = Very bad), (1.81-2.60 = bad), (2.61-3.40 = Moderate), (3.41-4.20 = Good), (4.21-5.00 = Very Good)

4.4 Description of the Destination attractiveness (mean and standard deviation)

The attractiveness of the destination the most powerful thing that motivates tourists to travel to Bali is an interest in Balinese culture, the natural beauty of Bali, history related to Bali. The second factor is the attractiveness of the leisure time in the destination, the events and festivals in destination, the various types of food and beverage in destination, the prices in destination, the facilities and services for hotels in a destination, the proximity from the country of origin, and the security of the destination. While the third attraction factor is the transportation has grown in destination, the health-supporting facilities in destination, the services of qualified tour guides, the quality travel agency services, and the comfort and service of immigration procedures (See Table 3).

Table 3. Mean of Destination Attractions

Indicator of Attraction Destination	Mean	Std. Deviation	Remark

ISSN: 2005-4238 IJAST
Copyright ⓒ 2020 SERSC

The culture of a destination	4.36	0.814	Very Good
The nature of a destination	4.31	0.881	Very Good
The history of a destination	4.25	0.873	Very Good
The leisure time in a destination	4.15	0.841	Good
The events and festivals in destination	3.98	0.985	Good
The various types of food and beverage in destination	3.98	0.987	Good
The prices in destination	3.82	1.077	Good
The facilities and services for hotels in a destination	3.70	1.036	Good
The proximity from the country of origin	3.69	1.112	Good
The security of the destination	3.41	1.239	Good
The transportation has grown in destination	3.38	1.142	Moderate
The health-supporting facilities in the destination	3.35	1.162	Moderate
The services of qualified tour guides	3.35	1.153	Moderate
The quality travel agency services	3.24	1.147	Moderate
The comfort and service of immigration procedures	3.07	1.292	Moderate
Valid N (listwise) = 413			

Remarks: (1.00-1.80 = Very bad), (1.81-2.60 = bad), (2.61-3.40 = Moderate), (3.41-4.20 = Good), (4.21-5.00 = Very Good)

4.5 Description of destination image (mean and standard deviation)

Until now, Bali tourism destinations still have a very good image as a destination that has a unique culture, history, and art. Another good image is that Bali is also a destination that has a Balinese image that has a good social environment, a Balinese image is good for leisure and recreation activities, a Balinese image has a good tourist infrastructure, a Balinese image has a good atmosphere, a Balinese image has a good natural environment, and image Bali has stable political conditions and good economic factors (See Table 4).

Table 4. Mean of Destination Images

Destination Images	Mean	Std.Deviation	Remark
Image Bali has a unique culture, history, and art	4.31	0.778	Very Good
Image Bali has a good social environment	4.14	0.898	Good
Image Bali is good for leisure and	4.13	0.922	Good

ISSN: 2005-4238 IJAST
Copyright ⓒ 2020 SERSC

recreation activities			
Image Bali has a good tourist Infrastructures	4.03	0.918	Good
Image Bali has a good atmosphere	3.92	0.940	Good
Image Bali has a good natural environment	3.84	1.079	Good
Image Bali has stable political conditions and good economic factors	3.42	1.029	Good
Valid N (listwise) = 413			

Remarks: (1.00-1.80 = Very bad), (1.81-2.60 = bad), (2.61-3.40 = Moderate), (3.41-4.20 = Good), (4.21-5.00 = Very Good)

4.6 Description of satisfaction with destinations (mean and standard deviation)

Regarding tourist satisfaction, several attributes were found to be following tourists' expectations when they traveled to Bali. They are very satisfied with the existing tourist attractions and satisfied with the trip to Bali. Some are also satisfied with the availability of facilities and are satisfied with services during a vacation in Bali (See Table 5).

Table 5. Mean of Tourist Satisfaction

Tourist Satisfaction	Mean	Std.Deviation	Remark
Satisfied with the existing tourist Attractions	4.22	0.780	Very Good
Satisfied with the trip in Bali	4.25	0.795	Very Good
Satisfied with the availability of the facilities	4.11	0.817	Good
Satisfied with the services during a vacation in Bali	4.16	0.814	Good
Valid N (listwise) = 413			

Remarks: (1.00-1.80 = Very bad), (1.81-2.60 = bad), (2.61-3.40 = Moderate), (3.41-4 .20 = Good), (4.21-5.00 = Very Good)

4.7 Description of tourist loyalty (mean and standard deviation)

At the end of the survey session, respondents were asked if they would return on their next tour and they answered that they would come again to Bali, and also recommend their family and friends to travel to Bali (See Table 6).

Table 6. Tourist Loyalty

Tourist Loyalty	Mean	Std. Deviation	Remark
Revisit Intention	4.38	0.778	Very Good

ISSN: 2005-4238 IJAST
Copyright ⓒ 2020 SERSC

Recommend others	4.39	0.767	Very Good
Valid N (listwise) = 413			

Remarks: (1.00-1.80 = Very bad), (1.81-2.60 = bad), (2.61-3.40 = Moderate), (3.41-4.20 = Good), (4.21-5.00 = Very Good)

4.8 Destination marketing chain model (SEM-AMOS Model Test)

The testing theoretically produces models that meet the criteria for the goodness of fit. The results of the confirmatory factor analysis that have met the suitability criteria of this model indicate that the researcher's assumptions regarding the suitability of the measurement model under study have been supported by observational data in the field. Of the several criteria to measure a model fit, namely RMSEA, GFI, AGFI, TLI, and CFI all indicate that the model can be said to be fit, requiring only minor modifications following the general rules in the analysis of structural models.Modifications can be made based on a priori concepts which assume that differences can occur between the initial concept and data in the field, this is following the statements of Hunter and Schmidt [46], that primary research is never perfect, which causes differences between the results the topic is the same though. The results of testing theoretical are models as seen in Figure 1.

ISSN: 2005-4238 IJAST
Copyright ⓒ 2020 SERSC

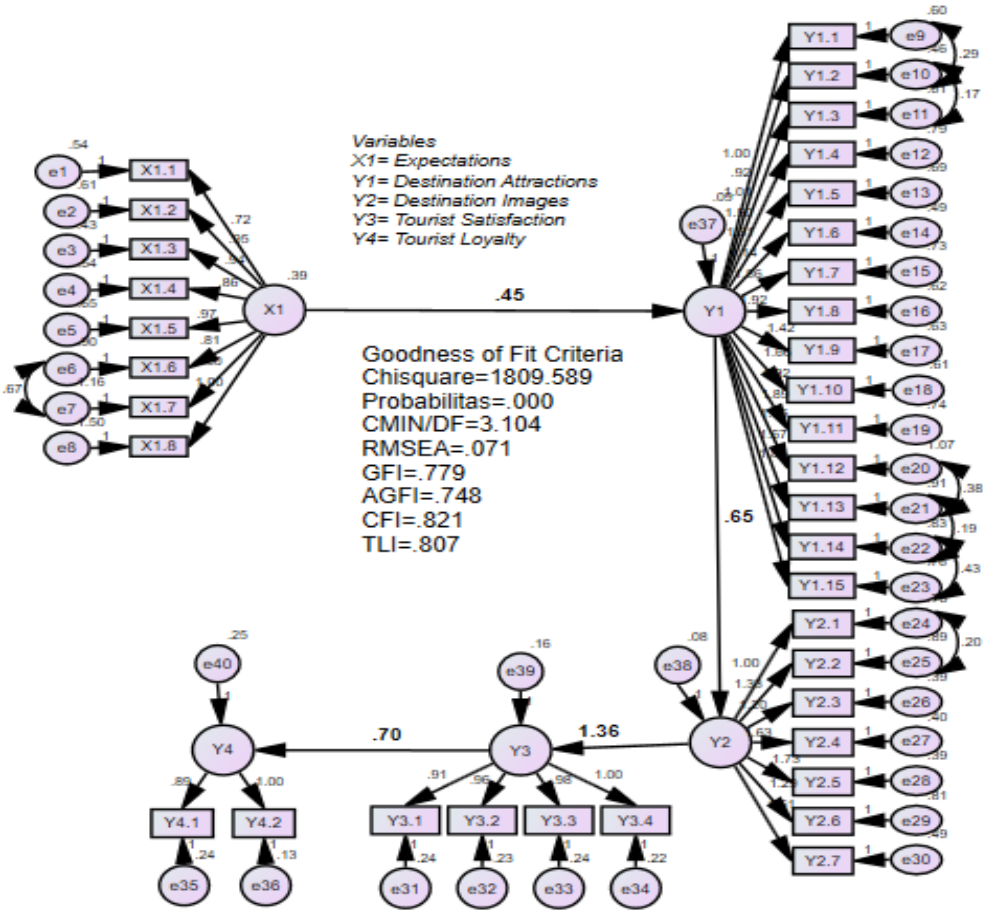

Figure 1. Structural Model of Tourist Behavior in Tourism Decision Making
Source: [6, 45]

The construct of this study is a combination of two constructs [6, 45] which have different latency, so overlapping research indicators are difficult to avoid. The chosen technique is to modify the indices of the indicators that are has a large MI (Modification of indices) is justified in the rules of the SEM structural model, as long as theoretically and conceptually, a pair of indicators is indeed possible overlapping [42]. The results of the model testing can be seen in Table 7.

Table 7.the Goodness of Fit Index

The goodness of Fit Index	Cut off Value	Result	Goodness of Fit
Chi-Square	Expected Small	1809.589	Fit
Significance Probability	≥ 0.05	0.000	Not used for n> 200
RMSEA	≤ 0.08	0.071	Fit
GFI	≥ 0.90	0.779	moderate

ISSN: 2005-4238 IJAST
Copyright ⓒ 2020 SERSC

AGFI	≥ 0.90	0.748	moderate
CMIN / DF	≤3.00	3.104	moderate
TLI	≥0.95	0.821	moderate
CFI	≥ 0.95	0.807	moderate

Test results can be declared eligible by some of the criteria in Table 7, namely the criteria of RMSEA, GFI, AGFI, CMIN / DF, TLI, and CFI so that all hypotheses proposed in this study can be explained.

Table 8. Maximum Likelihood Estimates Regression Weights

Correlations	Estimate	SE	CR	P	Decision
Y_1 <--- X_1	0.453	0.073	6.238	0.000	Significant at (CR> 1.96, and P <0.05)
Y_2 <--- Y_1	0.646	0.106	6.097	0.000	Significant at (CR> 1.96, and P <0.05)
Y_3 <--- Y_2	1.359	0.176	7.729	0.000	Significant at (CR> 1.96, and P <0.05)
Y_4 <--- Y_3	0.700	0.055	12.606	0.000	Significant at (CR> 1.96, and P <0.05)

Remark: X_1 = Expectation, Y_1 = Destination attraction, Y_2 = Destination Image, Y_3 = Tourist Satisfaction, Y_4 = Tourist Loyalty.

After all, assumptions can be fulfilled, and then hypothesis testing will be carried out as proposed in the previous chapter. Testing the four hypotheses of this research is carried out as shown in Table 8. The results of the hypothesis test are as follows:

1. Variable Expectation (X_1) has a positive and significant effect on the selection of destination attractiveness (Y_1) as evidenced by the results of the Critical Ratio test (6,238> 1.96).
2. Destination Attractiveness Variable (Y_1) has a positive and significant effect on Destination Imaging (Y_2) as evidenced by the results of the Critical Ratio test (6,097> 1.96).
3. Destination Image Variable (Y_2) has a positive and significant effect on Tourist Satisfaction (Y_3) as evidenced by the results of the Critical Ratio test (7,729> 1.96).
4. Tourist Satisfaction Variable (Y_3) has a positive and significant effect on Tourist Loyalty (Y_4) as evidenced by the results of the Critical Ratio test (12,606> 1.96).

ISSN: 2005-4238 IJAST
Copyright ⓒ 2020 SERSC

The results of testing this hypothesis, show conformity with the results of research Yoon and Uysal [45], the motivation theory of Iso-Ahola [22] and the opinion of Yoeti [44], where they argue that the variable internal motivation determines more tourist decisions to determine tourist destinations. The results of this study are the same as those of Chi [6], who found that internal motivation or expectation variables did not have a significant effect directly on tourist satisfaction, nor with tourist loyalty, and had to be mediated by destination imagery. The same opinion was conveyed by Pitana and Gayatri [31] that internal motivation is the driving factor before someone goes on a tour.

Furthermore, it is said that motivation is a very basic thing in the study of tourists and tourism because motivation is the driving force of the tour travel process. Likewise, Iso-Ahola [22] argues that internal motivation is the driving factor of a tourist, and external motivation which is a pull factor derived from the attributes of a destination. Both Pitana and Iso-Ahola assume that internal motivation and attractiveness are a unity of interest and motive for someone to travel and at the same time directing where they will travel. So, it can be concluded that the results of testing this hypothesis, has strengthened the opinion of Pitana and Gayatri [31]; Chi [6]; Iso-Ahola[22] who argue that internal motivation has a more significant effect on moving someone to travel.

Table 9. Direct Effects

Direct Effects	X_1 (Expectation)	Y_1 (Attraction)	Y_2 (Image)	Y_3 (Satisfaction)	Y_4 (Loyalty)
Y_1 (Attraction)	0.453	0.000	0.000	0.000	0.000
Y_2 (Image)	0.000	0.646	0.000	0.000	0.000
Y_3 (Satisfaction)	0.000	0.000	1.359	0.000	0.000
Y_4 (Loyalty)	0.000	0.000	0.000	0.700	0.000

The biggest direct effect is the direct effect between (Y_1) destination image on (Y_2) tourist satisfaction with a weight of 1.359 when compared to the direct effect between (Y_3) tourist satisfaction on (Y_4) tourist loyalty with a weight of 0.700, the direct influence between (Y_1) the attractiveness of the destination to (Y_2) the destination image with a weight of 0.646, and the direct influence between (X_1) tourist expectations (internal motivation) towards (Y_1) the attractiveness of the destination with a weight of 0.453 (See Table 9).

ISSN: 2005-4238 IJAST
Copyright ⓒ 2020 SERSC

5. Conclusions and Recommendations

5.1 Significance of research findings

The findings of this study are the same as those of Yoon and Uysal [6, 45], although the relationship between the variables in each model, there are different results. This research has answered four main problems, which can be explained as follows, (1) expectation variable has a positive and significant influence on destination selection, (2) destination attractiveness variable has a positive and significant effect on destination imaging, (3) image variable destination has a positive and significant effect on tourist satisfaction, and (4) tourist satisfaction variable has a positive and significant effect on tourist loyalty.

The results also prove that there is the most direct effect between destination image variables on tourist satisfaction, compared to other direct effects. Based on the results of the path analysis above, it can be concluded that the variable of tourist loyalty is determined in a way by the variables of tourist satisfaction, destination image, destination attractiveness, and tourist expectations. The results of this test are the same as Yoon and Uysal [6, 45].

5.2 Theoretical and Practical Recommendations

Although this study reached a large sample size, amount 413 respondents, they were dominated by those from Australia so that the results of this study were not representative so they could be used as a reference for generalizing demographic factors and tourist psychographic. The results of the analysis of the confirmation of the suitability of the theoretical model proved to be inadequate to the criteria for conformance with empirical data, which means that the researchers' assumptions about the suitability of the measurement model under study were not supported by survey data in the field. The mismatch of theoretical models with survey data is caused by (1) selection of research indicators that are fewer representatives of their latent variables, and (2) several indicators overlap each other so that it is difficult for respondents to distinguish between answers and provide answers.

The theoretical implications of this research are (1) further research can be done that considers respondents from various demographic and psychographic factors. (2) Further research by doing mixed methods. (3) The need to involve respondents from populations that have characteristics as populations that can be selected as a random sample. (4) Subsequent research, to use research indicators that can measure indicators directly related to expectations and offers for tourists.

The practical implications of this research are based on the results of research that have gaps between theory and data in the field. If Bali tourism destinations, expect tourists to be loyal to Bali destinations, it has implications for maintaining the satisfaction factor of tourists, where at present they are very satisfied with the existing

ISSN: 2005-4238 IJAST
Copyright ⓒ 2020 SERSC

tourist attractions and satisfied with the trip in Bali. Some are also satisfied with the availability of facilities and are satisfied with services during a vacation in Bali.

Acknowledgments

Thank you to the Ministry of Research and Technology of the Ministry of Research and Technology for funding the Basic Research Grant in the fiscal year 2019-2020. This study also non-financial has been supported by Lecturers and Students of Universitas Dhyana Pura, Bali.

References

[1] Ajzen, I. and Fishbein, M., Attitude-behavior relations: A theoretical analysis and review of empirical research. *Psychological Bulletin*, *84*(5), (1977) p.888.

[2] Backman, SJ, and Crompton, JL, Differentiating between high, spurious, latent, and low loyalty participants in two leisure activities. *Journal of park and recreation administration*, *9*(2), (1991) pp.1-17.

[3] Baloglu, S., and Mangaloglu, M., Tourism destination images of Turkey, Egypt, Greece, and Italy as perceived by US-based tour operators and travel agents. *Tourism management*, *22*(1) (2001) pp.1-9.

[4] Beerli, A., and Martin, JD, Factors influencing destination image. *Annals of tourism research*, *31*(3), (2004) pp.657-681.

[5] Binkhorst, E., and Den Dekker, T., Agenda for co-creation of tourism experience research. *Journal of Hospitality Marketing & Management*, *18*(2-3), (2009) pp.311-327.

[6] Chi, Gengqing, "*A Study of Developing Destination Loyalty Model"*. (Dissertation) Submitted to the Faculty of the Graduate College of the Oklahoma State University in Partial Fulfillment of the Requirements for the Degree of Doctor of Philosophy, (2005).

[7] Chon, KS, The role of destination image in tourism: A review and discussion. *The tourist review* (1990).

[8] Colton, CW, Leisure, recreation, tourism: A symbolic interactionist view. *Annals of Tourism Research*, *14*(3), (1978) pp.345-360.

[9] Dick, AS, and Basu, K., Customer loyalty: toward an integrated conceptual framework. *Journal of the academy of marketing science*, *22*(2), (1994) pp.99-113.

[10] Echtner, CM, and Ritchie, JB, The meaning and measurement of destination images. *Journal of tourism studies*, *2*(2), (1991) pp.2-12.

[11] Ekinci, Y., Riley, M., Chen, J, *A review of comparisons used in service quality and customer satisfaction studies: Emerging issues for hospitality and tourism research*. *Tourism Analysis*, 5 (2/4), (2001) pp197–202.

[12] Fakeye, PC, and Crompton, JL, Image differences between prospective, first-time, and repeat visitors to the Lower Rio Grande Valley. *Journal of travel research*, *30*(2), (1991) pp.10-16.

ISSN: 2005-4238 IJAST
Copyright ⓒ 2020 SERSC

[13] Francken, DA, van Raaij, WF and Verhallen, TMM, Satisfaction with leisure activities. In *Advances in economic psychology: third European colloquium on economic psychology, (1981)* (pp. 119-133).

[14] Gallarza, MG, Saura, IG and García, HC, Destination image: Towards a conceptual framework. *Annals of tourism research*, *29*(1), (2002) pp.56-78.

[15] Gartner, WC, and Ruzzier, MK, Tourism destination brand equity dimensions: Renewal versus repeat market. *Journal of travel research*, *50*(5), (2011) pp.471-481.

[16] Gitelson, RJ, and Crompton, JL, Insights into the repeat vacation phenomenon. *Annals of Tourism Research*, *11*(2), (1984) pp.199-217.

[17] Gnoth, J., Tourism motivation, and expectation formation. *Annals of Tourism Research*, *24*(2), (1997) pp.283-304.

[18] Gremler, DD, and Brown, SW, Towards a conceptual model of service loyalty. In *Marketing Theory and Applications AMA Winter Educators' Conference* (1997) pp. 218-219.

[19] Guliling, H., Aziz, YES, Bojei, J., and Sambasivan, M., *Conceptualizing image, satisfaction, and loyalty of heritage destinations* (2013).

[20] Gyte, DM, and Phelps, A., Patterns of destination repeat business: British tourists in Mallorca, Spain. *Journal of Travel Research*, *28*(1), (1989) pp. 24-28.

[21] Heskett, JL, Sasser, WE, Schlesinger, L. A. *The service profit chain*. New York, NY: The Free Press (1997).

[22] Iso-Ahola, SE, Motivational foundations of leisure. *Leisure studies: Prospects for the twenty-first century*, (1999) pp.35-51.

[23] Kelloway, EK, Structural equation modeling in perspective. *Journal of Organizational Behavior*, *16*(3), (1995) pp.215-224.

[24] Kotler, P, Keller, K. *Marketing Management*, 14th Edition, Pearson Education, Inc., publishing as Prentice Hall, One Lake Street, Upper Saddle River, New Jersey 07458 (2012).

[25] Kozak, M., and Rimmington, M., Tourist satisfaction with Mallorca, Spain, as an off-season holiday destination. *Journal of travel research*, *38*(3), (2000) pp.260-269.

[26] LaTour, SA, and Peat, NC, Conceptual and methodological issues in consumer satisfaction research. *Advances in consumer research*, *6*(1) (1979).

[27] Liljander, V. *Modeling perceived service quality using different comparison standards*. Journal of Consumer Satisfaction and Dissatisfaction, 7, (1994) 126–142.

[28] Mazursky, D., and Jacoby, J., Exploring the development of store images. *Journal of retailing*, *62*(2), (1986) pp.145-165.

[29] Milman, A., and Pizam, A., The role of awareness and familiarity with a destination: The central Florida case. *Journal of travel research*, *33*(3), (1995) pp.21-27.

[30] Oliver, Richard L. *When Customer Loyalty, Journal of Marketing*, Vol. 63. (1999) pp. 33-34 (Special Issues)

[31] Pitana, G., and Gayatri, PG, Tourism Sociology. *Yogyakarta: Andi Publishers*, (2005) pp *81*.

ISSN: 2005-4238 IJAST
Copyright ⓒ 2020 SERSC

[32] Ramseook-Munhurrun, P., and Naidoo, P., Examining the Structural Relationships of Destination Image, Perceived Value, Tourist Satisfaction, and Loyalty ... Procedia-Social and Behavioral Sciences, 175, (2015) pp.252-259.

[33] Satyarini, NWM, Rahmanita, M., and Setarnawat, S., The Influence of Destination Image on Tourist Intention and Decision to Visit Tourist Destination (A Case Study of Pemuteran Village in Buleleng, Bali, Indonesia). *TRJ Tourism Research Journal*, *1*(1), (2017) pp.81-97.

[34] Schofield, P., 2000. Developing a day trip expectation/satisfaction construct A comparative analysis of scale construction techniques. *Journal of Travel & Tourism Marketing*, *8*(3), pp.101-109.

[35] Sirgy, MJ, A social cognition model of consumer satisfaction/dissatisfaction an experiment. *Psychology & Marketing*, *1*(2), (1984) pp.27-44.

[36] Smith, SL, The tourism product. *Annals of tourism research*, *21*(3), (1994) pp.582-595.

[37] Tjiptono, F., Total Service Quality. *Yogyakarta: Andi Offset* (1997).

[38] Trimurti, Christimulia Purnama., Utama, I Gusti Bagus Rai. The Examination Bali Destination Marketing Chain Model Based On Tourist Motivation. *International Journal of Scientific & Technology Research 9 (3),* (2020) *4491-4495*

[39] Tze, Liying, Zhou., Wang, Xiaolin. *Tourist Satisfaction-based Tourism Destination Image Mode - TSS*. Available from http://www.ikk9.com cited 23 October (2012)

[40] Utama, IGBR,*Tourism Marketing.* Yogyakarta: Andi (2017).

[41] Utama, IGBR, I Nengah Laba, Ni Luh Christine Prawita Sari Suyasa, I Wayan Ruspendi Junaedi. Tourism Visitor Center Flowchart as Recommendation for the Bali Tourism Destination. *Engineering and Management Test.* Vol 83: March / April 2020, pp. (2020) 18306-18319

[42] Utama, IGBR, Mahadewi, NME, *Research Methodology.*Yogyakarta: Andi (2012).

[43] Wilkie, WL, and Moore, ES, 2007. What does the definition of marketing tell us about ourselves ?. *Journal of Public Policy & Marketing*, *26*(2), (1994) pp.269-276.

[44] Yoeti, Oka. *Tourism Marketing*. Bandung: Space. (1996).

[45] Yoon, Y. and Uysal, M., An examination of the effects of motivation and satisfaction on destination loyalty: a structural model. *Tourism Management*, *26*(1), (2005) pp. 45-56.

[46] Zeithaml, VA, Bitner, MJ, Gremler, DD, and Pandit, A., Marketing services: Integrating customer focus across the firm (2000).

ISSN: 2005-4238 IJAST
Copyright ⓒ 2020 SERSC